49"

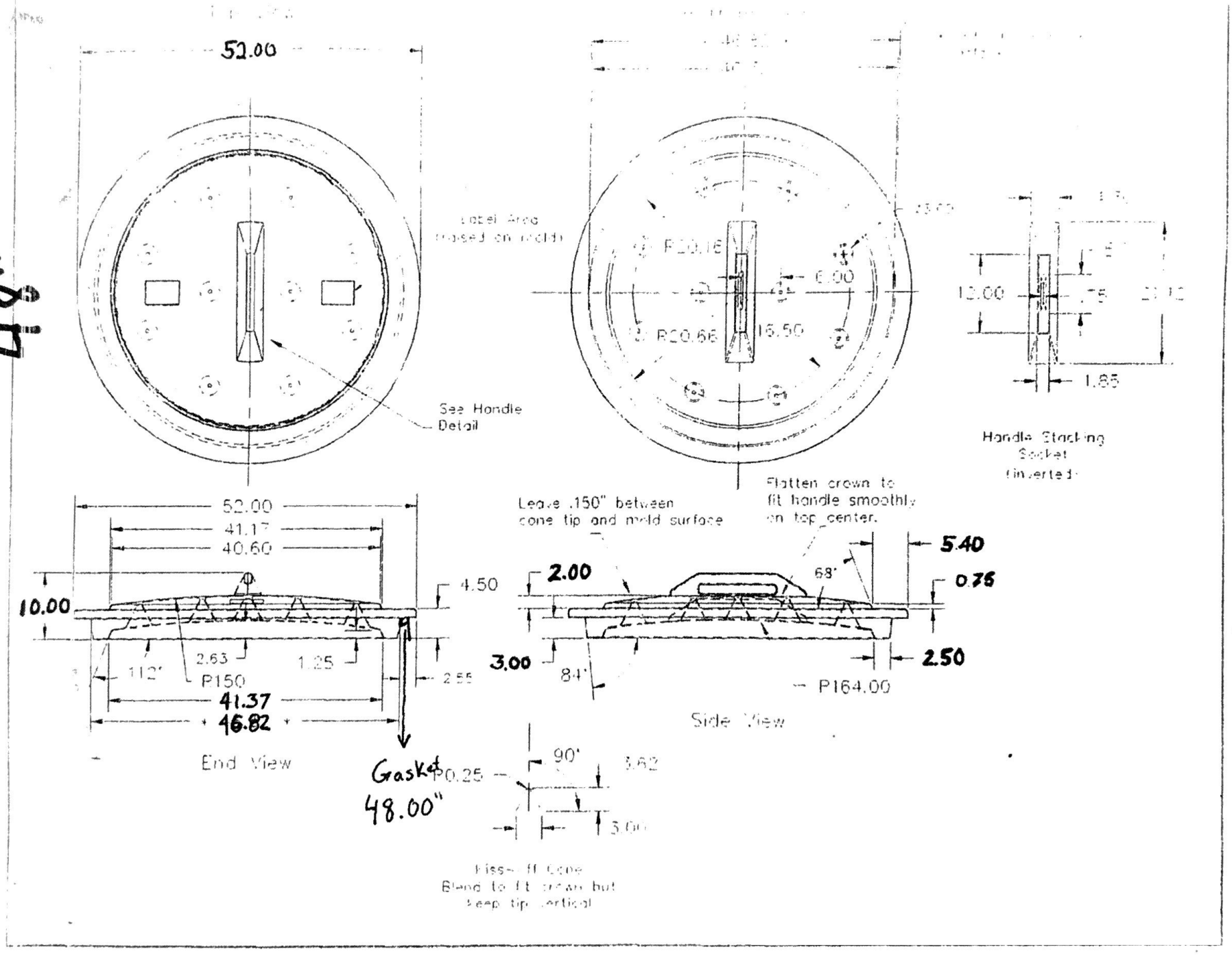
52.00
See Handle Detail
R20.16
6.00
R20.66
16.50
13.00
1.85
Handle Stacking Socket (inverted)
52.00
41.17
40.60
10.00
4.50
2.63
1.25
112°
P150
2.55
41.37
46.82
End View
Gasket
48.00"
Leave .150" between cone tip and mold surface
Flatten crown to fit handle smoothly on top center.
2.00
68°
5.40
0.75
3.00
84°
2.50
P164.00
Side View
90°
3.62
P0.25
3.00
Kiss-fit Cone
Blend to fit crown but keep tip vertical